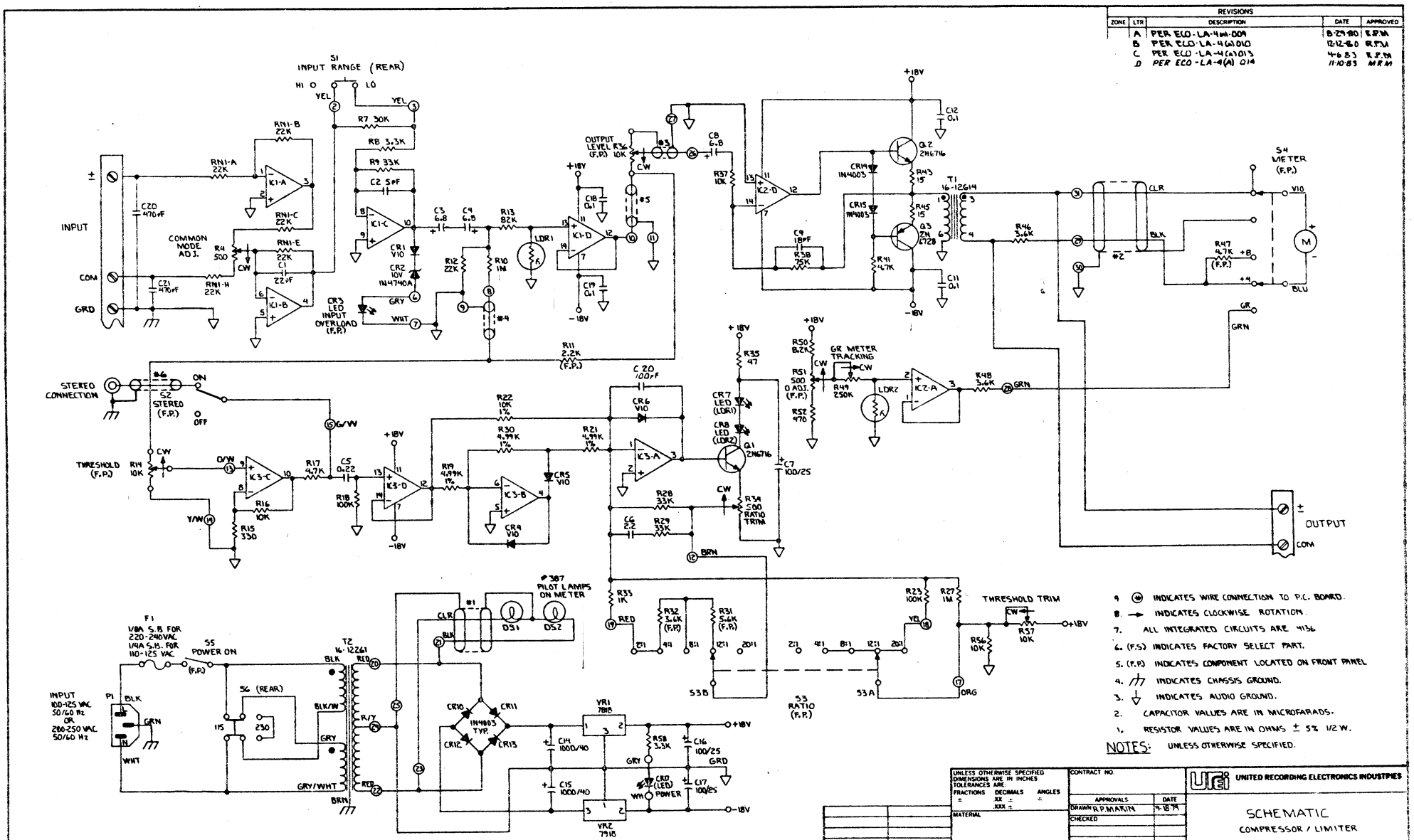

REVISIONS				
ZONE	LTR	DESCRIPTION	DATE	APPROVED
	A	PER ECO-LA-4(a)-009	8-29-80	R.P.M.
	B	PER ECO-LA-4(a)010	12-12-80	R.P.M.
	C	PER ECO-LA-4(a)013	4-6-83	R.P.M.
	D	PER ECO-LA-4(A) 014	11-10-83	MRM

9. ⊕ INDICATES WIRE CONNECTION TO P.C. BOARD.
8. → INDICATES CLOCKWISE ROTATION.
7. ALL INTEGRATED CIRCUITS ARE 4136
6. (F.S.) INDICATES FACTORY SELECT PART.
5. (F.P.) INDICATES COMPONENT LOCATED ON FRONT PANEL
4. ⏚ INDICATES CHASSIS GROUND.
3. ⏚ INDICATES AUDIO GROUND.
2. CAPACITOR VALUES ARE IN MICROFARADS.
1. RESISTOR VALUES ARE IN OHMS ± 5% 1/2 W.

NOTES: UNLESS OTHERWISE SPECIFIED.

UNLESS OTHERWISE SPECIFIED DIMENSIONS ARE IN INCHES TOLERANCES ARE:
FRACTIONS ± DECIMALS .XX ± .XXX ± ANGLES ±

MATERIAL

FINISH

NEXT ASSY | USED ON
APPLICATION

DO NOT SCALE DRAWING

CONTRACT NO.

APPROVALS	DATE
DRAWN R.P. MARIN	9-18-79
CHECKED	

UREI UNITED RECORDING ELECTRONICS INDUSTRIES

SCHEMATIC
COMPRESSOR / LIMITER

SIZE D | MODEL NO. LA4(A) | DRAWING NO. 13247 D

SCALE ~ | SHEET 1 OF 1